GSS **Smart Server**

Hybrid 16S2X 8CI QM

16xDVB-S2 in 160 x SPTS , 16 x QAM und 16 x MPTS

Features



- 8 SAT IF inputs with integrated multiswitch
- Up to 4 satellites with each 4 levels...
  ... in conjunction with specially programmed multi-switches
- 16 DVB-S2X tuners with 16/32/64/128/256APSK support
  – SAT input selectable
- 16 x MPTS out (max data rate <800 Mbit/s)
- Up to 160 services can be converted into IP SPTS transport streams.
  – Free adjustable IP addresses.
  – EPG; can be switched off in order to reduce data rate.
  – Session Announcement Protocol (SAP) is supported.
  – Service list for DRIP1000; Panasonic, Loewe, Philips, VESTEL BEWATEC TVs and Amino H200
- HTML User interface
- World wide access via OpenVPN… ... by PC, tablet with Internet access.
- 16 QAM Fullband modulator with 8 MHz grid
  – MER >42 dB
  – Output level is adjustable
  – Symbol rate and modulation individually adjustable
- 10 Media player
  – 10 Stream´s in endless loop as IP SPTS – transport streams
- 10 Webplayer (HLS) (option) as IP transport streams and QAM out
  – 10 Stream´s from Internet (option)
- 8 CI Slots for 8 independent Conditional Access Module Multiplex of SAT input, media player and web player programs to QAM and/or MPTS output signal
- Multiplex of SAT input, media player and web player(option) programs to QAM and/or MPTS output signal

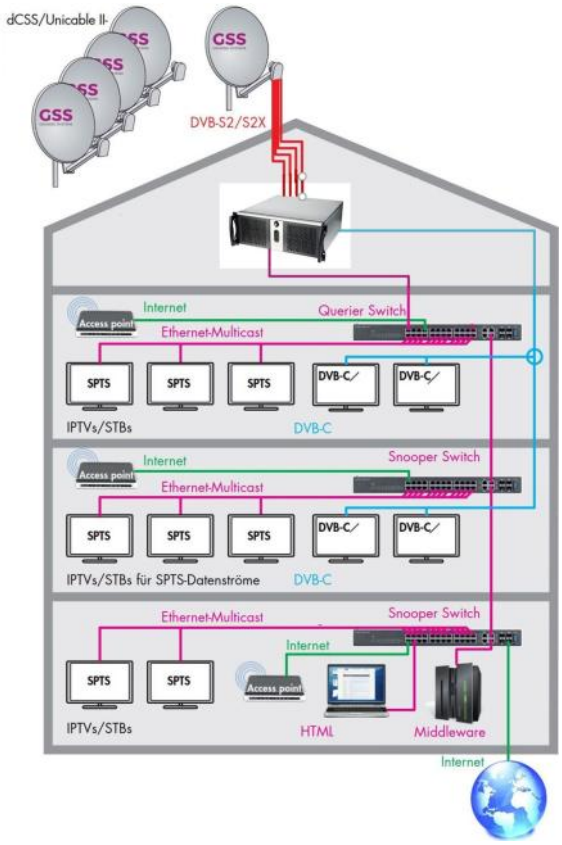

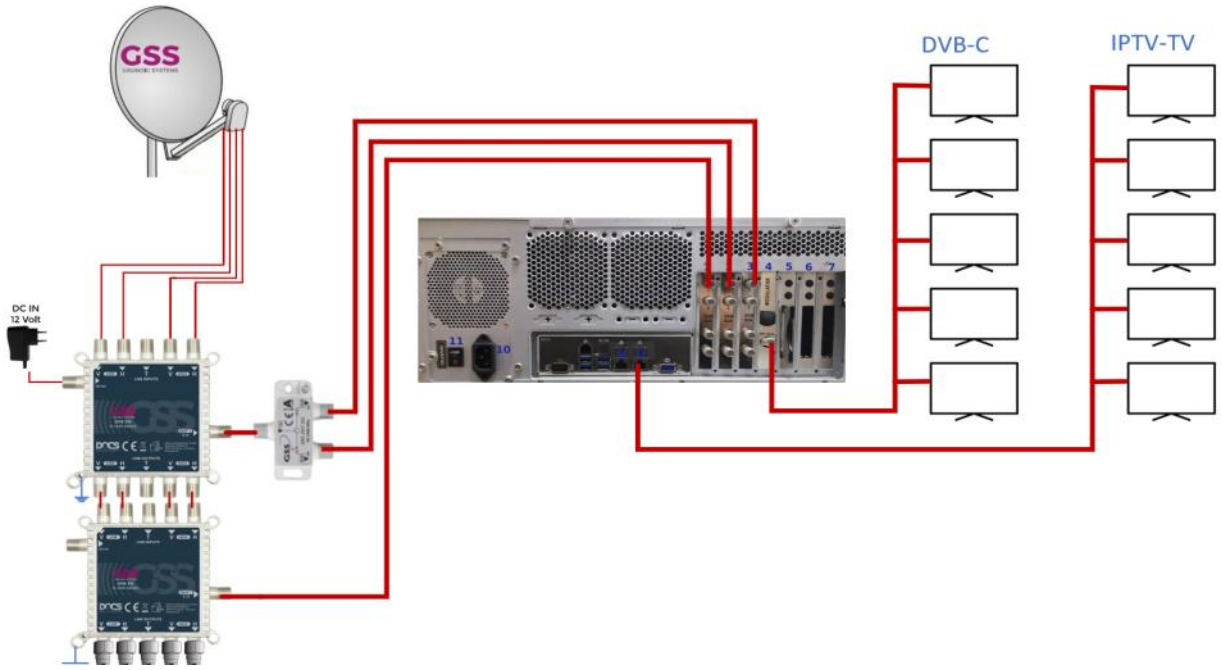

GSS Smart Solutions GmbH • Beuthener Str. 33 • 90471 Nürnberg • Tel. +49 (0)911 300 829 0 • info@gss.de • www.gss.de

Copyright 2022 GSS Smart Solutions GmbH • All rights reserved • Specifications are subject to change without notice.

Technical data:

The devices meet the EU directives 2011/65/EU, 2014/30/EU and 2014/35/EU.
The product fulfils the guidelines and standards for CE labelling.
Unless otherwise noted all values are specified as "typical".

RF input DVB-S2

Frequency range:	950 ... 2150 MHz
DVB-S modes:	QPSK 1/2 , 2/3 , 3/4 , 5/6 , 7/8
DVB-S2-modes:	QPSK 1/2 , 3/5 , 2/3 , 3/4 , 4/5 , 5/6 , 8/9 , 9/10
	8PSK 3/5 , 2/3 , 3/4 , 5/6 , 8/9 , 9/10
	16APSK 2/3, 3/4, 4/5, 5/6, 8/9, 9/10
	32APSK 3/4, 4/5, 5/6, 8/9, 9/10
Symbol rate DVB-S:	QPSK: 1 ... 45 MSymb/s
Symbol rate DVB-S2:	QPSK: 4,5 ... 45 MSymb/s
	8PSK: 4,5 ... 45 MSymb/s
	16APSK: 4,5 ... 39 MSymb/s
	32APSK: 4,5 ... 32 MSymb/s
Maximum data rate/tuner	83 MBit/s
Level range:	60 dBµV ... 80 dBµV
Input impedance:	75 Ω
LNC supply:	14V/18V; max. 400 mA

RF output QAM 16 Channels

Frequency range 8 MHz Grid	114MHz ... 868,0 MHz
Types of modulation:	QAM 16, 32, 64, 128, 256
Output level:	80...96 dBµV
Dynamic phase error:	< 0,2°
MER:	> 42 dB
Symbol rate:	1000...7100 kSym
Output impedance :	75 Ω

Multiplex (Webplayer is a option)

Multiple programs from SAT tuner, IPTV, Mediaplayer and Webplayer to QAM - Output signal

Connections

SAT inputs :	8 F-Buchsen
RF output:	1 F-Buchse
LAN 1000-BASE-T:	2 RJ45-Buchse
USB	4 x USB 3-1 (5Gbps) port
CI Slots	8 (several channels can be descrambled)

IPTV-Outputs

SPTS	160
MPTS	24
IGMP	V2
Protokolle:	UDP (User Data Protocol), RTP (Real-Time Transport Protocol)

General

Supply voltage	200...240 V ~, 50/60 Hz
Power consumption:	90W (ohne LNC-Speisung)
Ambient temperature:	0...+50 °C
Cooling	aktiv
Dimensions (W x H x D):	19 Zoll 4 HE 484mm x 180 mm x 515 mm
Weight :	15 kg

Copyright 2022 GSS Smart Solutions GmbH • All rights reserved • Specifications are subject to change without notice.